United States Patent [19]

Canty

[11] **Patent Number: 4,965,601**

[45] **Date of Patent: Oct. 23, 1990**

[54] **HIGH PRESSURE/TEMPERATURE CAMERA**

[76] Inventor: **Thomas M. Canty,** 483 Fruitwood Terrace, Williamsville, N.Y. 14221

[21] Appl. No.: **416,706**

[22] Filed: **Oct. 3, 1989**

[51] **Int. Cl.**[5] **G03B 37/00**

[52] **U.S. Cl.** **354/63;** 354/81; 358/99; 358/100

[58] **Field of Search** ..... 354/63, 76, 81, 293, 354/295; 358/99, 100; 73/323, 327, 328, 331; 220/82 A

[56] **References Cited**

U.S. PATENT DOCUMENTS

2,744,487	5/1956	Moore et al.	73/323
3,229,851	1/1967	Olsen	73/323
3,837,226	9/1974	Kawawa	73/331
4,245,566	1/1981	Shimansky et al.	220/82 R X
4,346,404	8/1982	Gantenbrink	358/99
4,809,862	3/1989	Canty	220/82 A

Primary Examiner—Brian W. Brown

Attorney, Agent, or Firm—James J. Ralabate

[57] **ABSTRACT**

A camera viewing unit for viewing the inside of a reaction vessel or the like is the invention disclosed. This viewing unit has a fixed lens positioned in front of the camera lens. The camera is focused by moving the fixed lens. The camera has a fused lens in front of the fixed lens; this fused lens minimizes corrosion of the unit. There are also easy alignment means to ensure a level picture is transmitted.
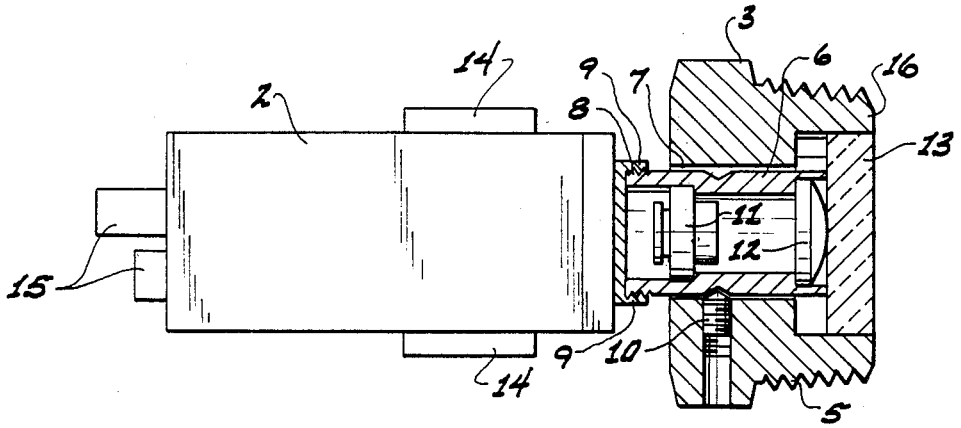
15 Claims, 1 Drawing Sheet